A Survey on Touch Based Hand Gesture Recognition Using ANNs

[1]Shilpi Garg, [2]Pankaj Dev Chaddha
[1,2]Dept. of Computer Science, GIMT, Kanipla, Kurukshetra University, Kurukshetra, Harayana, India

Abstract
A gesture recognition system where each gesture specifies a word. Gesture recognition is more difficult than posture recognition because it has to handle dynamic processes. To deal with dynamic processes we use a recurrent neural network. Here, we describe a gesture recognition method which can recognize continuous gesture. The Pattern recognition by any computer or machine can be implemented via various methods such as Hidden Harkov Models (HMM), Linear Programming (LP) and Neural Networks (NNs). This paper reviews why using ANNs in particular is better suited for analyzing human motions patterns.

Keywords
Hand Gesture, Gesture Recognition, ANNs, Pattern Recognition

I. Introduction

Hand and arm gestures receive the most attention among those who study gesture – in fact, many (if not most) references to gesture recognition only consider hand and arm gestures. The vast majority of automatic recognition systems are for deictic gestures (pointing), emblematic gestures (isolated signs), and sign languages (with a limited vocabulary and syntax). Some are components of bimodal systems, integrated with speech recognition. Some produce precise hand and arm configuration while others only coarse motion.

Computer recognition of hand gestures may provide a more natural human-computer interface, allowing people to point, or rotate a CAD model by rotating their hands. Interactive computer games would be enhanced if the computer could understand players' hand gestures. Gesture recognition may even be useful to control household appliances. There are two categories of gestures: static and dynamic [10]. A static gesture is a particular hand conguration and pose, represented by a single image. A dynamic gesture is a moving gesture, rep- resented by a sequence of images. We focus on the recognition of static gestures, although our method generalizes in a natural way to dynamic gestures. For the broadest possible application, a gesture recognition algorithm should be fast to compute. Here, we apply a simple pattern recognition method to hand gesture recognition, resulting in a fast, use- able hand gesture recognition system.

II. Hand Gesture Recognition using ANNs

Neural nets represent an approach to Artificial Intelligence that attempts to model the human brain. Neurons are processing units that operate in parallel inside the human brain. There are an estimated 10 billion neurons in the human brain with about 60 trillion connections between these neurons. Each neuron receives inputs from other neurons in the form of tiny electrical signals and, likewise, it also outputs electrical signals to other neurons. These outputs are weighted in the sense that the neuron does not 'fire' any output unless a certain threshold/bias is reached [8-9]. These weights can be altered through learning experiences; this is how the brain learns. The brain is therefore a network of neurons acting in parallel – a Neural Network. Similarly, an Artificial Neural Nets consists of artificial neurons, which are mathematical models of biological neurons. Like the biological neuron, an artificial neuron (called a perceptron), receives numerical values and also outputs a numerical value.

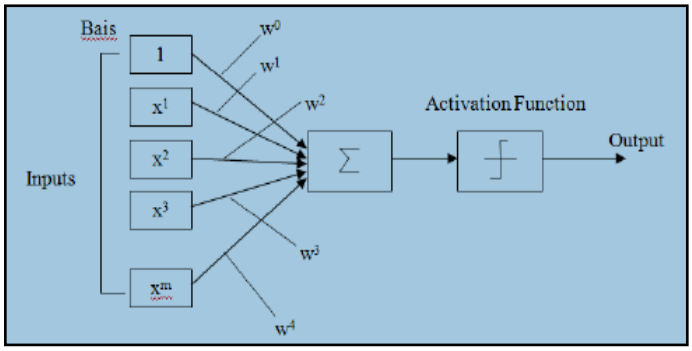

Fig. 1: Representation of an Artificial Neuron

The diagram below shows a representation of an artificial neuron. The input into the perceptron consists of the numerical value multiplied by a weight plus a bias. The perceptron only fires an output when the total strength of the input signals exceeds a certain threshold. As in biological neural Networks, this output is fed to other perceptrons. The weighted input to a perceptron is acted upon by a function (the transfer function) and this will determine the activation or output. Common transfer functions used in Artificial Neural networks include the Hard Limiter, Log-Sigmoid and the Sign function.

III. Related Work

Stergiopoulou, Ekaterini, and Nikos Papamarkos et. al. [1]. presents a new method for hand gesture recognition is proposed which is based on an innovative Self-Growing and Self- Organized Neural Gas (SGONG) network. Initially, the region of the hand is detected by using a color segmentation technique that depends on a skin-color distribution map. Then, the SGONG network is applied on the segmented hand so as to approach its topology. Based on the output grid of neurons, palm geometric characteristics are obtained which in accordance with powerful finger features allow the identification of the raised fingers. Finally, the hand gesture recognition is accomplished through a probability-based classification method. The hand gesture recognition system, which was implemented in Delphi, was tested by using a test set of hand images from five different people with varying morphology, slope and size. The test images, that are 180, represent all of the 31 feasible gestures at almost equal times. The system was tested 10 times for each one of the test images. The average computation time required for the recognition of a hand gesture is about 1.5 sec. The recognition rate, under the conditions described above, is 90.45%. This satisfactory recognition rate is due to the robustness of each one of the stages of the proposed method. The mistakes of the recognition process are due to false feature extraction and mainly due to false estimation of the hand slop.

Dipietro, Laura, et. al. [2] presents that Hand movement data acquisition is used in many engineering applications ranging

from the analysis of gestures to the biomedical sciences. Glove-based systems represent one of the most important efforts aimed at acquiring hand movement data. While they have been around for over three decades, they keep attracting the interest of researchers from increasingly diverse fields. This paper surveys such glove systems and their applications. It also analyzes the characteristics of the devices, provides a road map of the evolution of the technology, and discusses limitations of current technology and trends at the frontiers of research. A foremost goal of this paper is to provide readers who are new to the area with a basis for understanding glove systems technology and how it can be applied, while offering specialists an updated picture of the breadth of applications in several engineering and biomedical sciences areas. While future research directions remain open to discussion, this paper has made it clear that the breadth of research in glove devices has expanded and grown over the past three decades. This area of research remains very active and it is evident that technological advances in computing, sensor devices, materials and processing/classification techniques will make the next generation of glove devices cheaper, more powerful, versatile. The role of software in making glove devices more ubiquitous in daily lives cannot be overemphasized. Recent history has shown that when the underlying software is intuitive and seamless, then mass adoption of the device is a consequence (e.g., iPod). The authors suspect that this moment is not far away for glove devices—the time frame will continue to be shortened as researchers from different areas of academia and industry work toward resolving the technological challenges discussed herein.

Wan, Khairunizam, Nazrul Hamizi Bin Adnan et. al. [3] presents that Many deaf people communicate with hearing people either through interpreter or text writing. However, some of them are able to use sign language (SL). SL is a language which determines a form of nonverbal communication in which visible bodily actions are used to communicate particular messages, either in place of speech or together and in parallel with spoken words. Nowadays, many facilities for the deaf and could not speak person was created. Among them are quite popular right now is Data glove. A device capable of recording hand movements, both the position of the hand and its orientation as well as finger movements; it is capable of simple gesture recognition and general tracking of three-dimensional hand orientation. In writing this paper, the authors presented several methods that can be used to produce a prototype that is useful for hand gesture and recognition. From the literature suggests that the use of artificial neural network (ANN) is very broad as well as the use of Fuzzy Inference System. There are many kinds of methods can be used to ensure a successful study of hand gestures. The authors study will be more focusing on the specialization of Fuzzy Probability Approach. This project was meant to be a prototype to check the feasibility of recognizing sign languages using sensor gloves / data glove. The completion of this prototype suggests that sensor gloves can be used for partial sign language recognition. Sign languages, as spoken languages, have certain rules of grammar for forming sentences. These rules must be taken into account while translating a sign language into a spoken language. In the end, adding a speech engine to speak the translated text would help enhance ease of use.

Chaudhary, Ankit, Jagdish Lal Raheja et. al. [4-5] presents that Hand Gestures Recognition (HGR) is one of the main areas of research for the engineers, scientists and bioinformatics. HGR is the natural way of Human Machine interaction and today many researchers in the academia and industry are working on different application to make interactions more easy, natural and convenient without wearing any extra device. HGR can be applied from games control to vision enabled robot control, from virtual reality to smart home systems. The authors discussing work done in the area of hand gesture recognition where focus is on the intelligent approaches including soft computing based methods like artificial neural network, fuzzy logic, genetic algorithms etc. The methods in the preprocessing of image for segmentation and hand image construction also taken into study. Most researchers used fingertips for hand detection in appearance based modeling. Finally the comparison of results given by different researchers is also presented. Different applications of hand gesture recognition have been implemented in different domains from simply game inputs to critical applications. Hand gesture recognitions is the natural to interact with vision enabled computers and other machines. This paper primarily focused on the study of work done in the area of natural hand gesture recognition using Computer Vision Techniques. The authors did survey based on intelligent approaches mainly in the context of soft computing. Approaches using Artificial Neural Network, Fuzzy Logic, Genetic Algorithm and other well performed intelligent techniques have been discussed and compared. In appearance based approach, main focus was on fingertip detection as it was used by mostly researchers. Soft computing provides a way to define things which are not certain but with an approximation that can be make sure using learning models and training data. So soft computing is very effective in getting the results where the exact positions of hand or fingers are not possible. In the future will work in the area of individual finger position bending detection and movements, as work done in this area are very few. Mostly researchers worked with full hand position detection or the fingertip position to write virtual words.

Rautaray, Siddharth S. et. al. [6] presents that computers become more pervasive in society, facilitating natural Human– Computer Interaction (HCI) will have a positive impact on their use. Hence, there has been growing interest in the development of new approaches and technologies for bridging the human–computer barrier. The ultimate aim is to bring HCI to a regime where interactions with computers will be as natural as an interaction between humans, and to this end, incorporating gestures in HCI is an important research area. Gestures have long been considered as an interaction technique that can potentially deliver more natural, creative and intuitive methods for communicating with computers. This paper provides an analysis of comparative surveys done in this area. The use of hand gestures as a natural interface serves as a motivating force for research in gesture taxonomies, its representations and recognition techniques, software platforms and frameworks which is discussed briefly in this paper. It focuses on the three main phases of hand gesture recognition i.e. detection, tracking and recognition. Different application which employs hand gestures for efficient interaction has been discussed under core and advanced application domains. This paper also provides an analysis of existing literature related to gesture recognition systems for human computer interaction by categorizing it under different key parameters. It further discusses the advances that are needed to further improvise the present hand gesture recognition systems for future perspective that can be widely used for efficient human computer interaction. The main goal of this survey is to provide researchers in the field of gesture based HCI with a summary of progress achieved to date and to help identify areas where further research is needed. Over the past few years the use of natural human hand gestures for interaction with computing devices has continued to be a thriving area of

research. This survey has identified more than two hundred fifty recent related publications in major conferences and journals. Increased activity in this research area has been a driven by both scientific challenge of recognizing hand gestures and the demands of potential applications related to desktop and tablet PC applications, virtual reality etc. This survey is an endeavor to provide the upcoming researchers in the field of human computer interaction a brief overview of the core technologies related to and worked upon in the recent years of research. There are well known limitations of the core technologies that need to be addressed and provide the scope for future research and development. Analysis of the comprehensive surveys and articles indicates that the techniques implemented for hand gesture recognition are often sensitive to poor resolution, frame rate, drastic illumination conditions, changing weather conditions and occlusions among other prevalent problems in the hand gesture recognition systems. The survey enlists some the common enabling technologies of hand gesture recognition and advantages and disadvantage related to them. The paper list out some of the vision based commercial products and software's for hand gesture recognition available in market.

III. Conclusion

In this paper various methods are discussed for gesture recognition, these methods include from Neural Network, HMM, fuzzy c-means clustering, besides using orientation histogram for features representation. For dynamic gestures HMM tools are perfect and have shown its efficiency especially for robot control NNs are used as classifier and for capturing hand shape in For features extraction, some methods and algorithms are required even to capture the shape of the hand as in applied Gaussian bivariate function for fitting the segmented hand which used to minimize the rotation affection. The selection of specific algorithm for recognition depends on the application needed. In this work application areas for the gestures system are presented.

References

[1] Stergiopoulou, Ekaterini, Nikos Papamarkos,"A new technique for hand gesture recognition", In Image Processing, 2006 IEEE International Conference on, pp. 2657-2660. IEEE, 2006.

[2] Dipietro, Laura, Angelo M. Sabatini, Paolo Dario,"A survey of glove-based systems and their applications", Systems, Man, and Cybernetics, Part C: Applications and Reviews, IEEE Transactions on 38, No. 4, pp. 461-482, 2008.

[3] Wan, Khairunizam, Nazrul Hamizi Bin Adnan, A. B. Shahriman, Siti Khadijah Za'aba, Mohd Azri Abd Aziz, Zulkifli Md Yusof,"Gesture Recognition Based On Hand Postures And Trajectories By Using Dataglove: A Fuzzy Probability Approach–A Review", 2012.

[4]. Chaudhary, Ankit, Jagdish Lal Raheja, Karen Das, and Sonia Raheja. "Intelligent approaches to interact with machines using hand gesture recognition in natural way: A survey", arXiv preprint arXiv:1303.2292, 2013.

[5] Chaudhary, Ankit, J. L. Raheja, Karen Das, Sonia Raheja. "A survey on hand gesture recognition in context of soft computing", In Advanced Computing, pp. 46-55. Springer Berlin Heidelberg, 2011.

[6] Rautaray, Siddharth S., Anupam Agrawal,"Vision based hand gesture recognition for human computer interaction: A survey", Artificial Intelligence Review (2012): 1-54.

[7] Khan, Rafiqul Zaman, Noor Adnan Ibraheem,"HAND GESTURE RECOGNITION: ALiterature", 2012.

[8] Hasan, Haitham, S. Abdul-Kareem,"Static hand gesture recognition using neural networks", Artificial Intelligence Review 41, No. 2, pp. 147-181, 2014.

[9] Yewale, Shweta K., Pankaj K. Bharne,"Artificial neural network approach for hand gesture recognition", International Journal of Engineering Science and Technology (IJEST) Vol. 3, pp. 2603-2608, 2011.

[10]. Freeman, William T., Michal Roth,"Orientation histograms for hand gesture recognition", In International Workshop on Automatic Face and Gesture Recognition, Vol. 12, pp. 296-301, 1995.